Large Signal Performance of Ferroelectric FBARs

Victor Lee, Seungku Lee, Seyit Ahmet Sis, and Amir Mortazawi

Department of Electrical Engineering and Computer Science, University of Michigan,
Ann Arbor, MI 48109, USA

***Abstract* — Ferroelectric thin film bulk acoustic wave resonators (FBARs) have been of growing interest due to their electric field dependent properties. Resonators based on the ferroelectric barium strontium titanate ($Ba_xSr_{(1-x)}TiO_3$, BST) are intrinsically switchable, namely they have resonances that switch on with the application of a dc bias voltage. In this paper, the large signal performance and nonlinear behavior of BST FBARs are investigated. Measurement results show as the dc bias voltage increases, the nonlinear behavior due to high RF input power decreases. For better understanding, measurement results of BST FBARs are fitted to a nonlinear modified Butterworth-Van Dyke (MBVD) model with respect to dc bias voltage and RF input power.**

***Index Terms* — Ferroelectric devices, film bulk acoustic resonators, nonlinear systems.**

I. Introduction

Ferroelectric thin films have an electric field dependent permittivity as well as an electric field induced piezoelectric effect. In the absence of an external electric field, ferroelectrics have a relative permittivity in the several hundreds and a piezoelectric coefficient near zero. With the introduction of an electric field from the application of a dc bias voltage, an electrostriction based piezoelectric effect emerges. As the electric field increases, the permittivity decreases and the piezoelectric coefficient increases. These properties have led to a rapidly growing interest in the use of ferroelectric based devices such as varactors [1]-[3] and more recently, FBARs [4]-[6], for tunable and switchable circuits.

Accurate and comprehensive models are necessary to design ferroelectric thin film based circuits. Physics [7], [8] and equivalent circuit based models [9] that demonstrate the dc bias voltage dependent behavior of ferroelectric resonators have been developed. However, as the number of applications for ferroelectric based devices grows, their RF power dependent behavior needs to be characterized and modeled. The nonlinear behavior of ferroelectric varactors [10] and piezoelectric FBARs [11], [12] have been characterized and modeled by various research groups. Nonetheless, the large signal and nonlinear behavior of ferroelectric FBARs have yet to be investigated and modeled.

In this paper, the large signal performance of ferroelectric resonators based on barium strontium titanate ($Ba_{0.5}Sr_{0.5}TiO_3$, BST) is presented. The measurement results of the resonators at different dc bias voltages and RF input power levels are provided and their effect on the quality factors and electromechanical coupling is discussed. Based on the measurement results, a nonlinear modified Butterworth-Van Dyke (MBVD) model that is a function of dc bias voltage and RF input power is developed for better understanding of the large signal performance of ferroelectric FBARs.

II. Device Fabrication

The BST FBAR presented here is fabricated using pre-platinized high resistivity silicon wafers consisting of SiO_2, TiO_2 and Pt layers with thicknesses of 500, 40, and 150 nm, respectively [13]. The platinum layer is patterned using photolithography and etched with aqua regia (1:3, $HCl:HNO_3$, heated to 50 ºC). BST is deposited on the patterned substrate using pulsed laser deposition (PLD) as described in [4]. A 100 nm layer of platinum is deposited on the BST layer using e-beam evaporation and liftoff to serve as the top electrode. Layers of Al/Au (500/500 nm) are also deposited using e-beam evaporation to form the probe pads for testing the device. The last processing step is to etch the silicon substrate from beneath the device using DRIE to create a membrane. Fig. 1 shows the fabricated resonator that is discussed in the following section. It has an area of 650 μm^2.

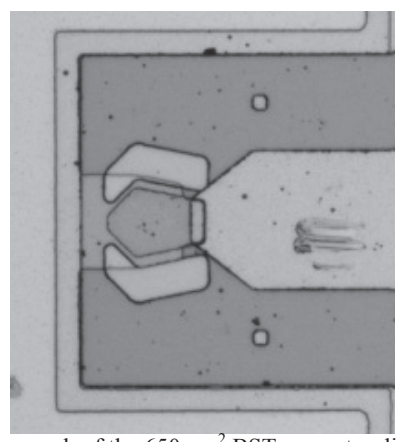

Fig. 1. Micrograph of the 650 μm^2 BST resonator discussed in this paper.

III. Measurement Results

The BST film bulk acoustic wave resonator (FBAR) is measured using one port ground-signal-ground (GSG) co-planar waveguide (CPW) probe pads. Measurements are

978-1-4673-1088-8/12/$31.00 ©2012 IEEE

acquired using 150 µm pitch GSG probes and an Agilent E8364B network analyzer. The network analyzer is calibrated using short, open, and load standards from a calibration substrate, setting the reference plane at the GSG probe tips. Measurements are taken at frequencies of 100 MHz to 3 GHz and at bias voltages of 0 to 25 V as the power available from the source is swept from -18 to 8 dBm. The input impedance of the resonator is plotted in Fig. 2 at bias voltages of 5 and 25 V and power levels of -8, 0, and 8 dBm. Measurement results show that at both 5 and 25 V dc bias, the input impedance of both resonators begins to deviate from the small signal values when the power level is above 0 dBm.

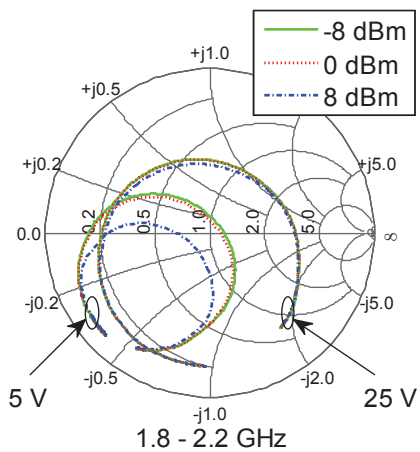

Fig. 2. The Smith chart showing the input impedance of the BST FBAR at bias voltages of 5 and 25 V and power levels of -8, 0, and 8 dBm.

The quality factor (Q) and effective electromechanical coupling coefficient ($K^2_{t,eff}$) are important figures of merit for FBARs and are calculated using (1) and (2), respectively. The Q is calculated from the change in the phase of the input impedance with respect to frequency. The $K^2_{t,eff}$ is calculated using the series (f_s) and parallel (f_p) resonance frequencies, which are defined as the frequency at which the input reactance is zero and the input resistance is minimal and maximal, respectively. These quantities are extracted from the measurement results taken at the conditions discussed above and are shown in Fig. 3.

$$Q = \frac{f}{2}\left|\frac{d\phi_{Zin}}{df}\right|_{f=f_s} \tag{1}$$

$$K^2_{t,eff} = \frac{\pi}{2}\frac{f_s}{f_p}\tan\left(\frac{\pi}{2}\frac{(f_p - f_s)}{f_p}\right) \tag{2}$$

Fig. 3 shows that as the dc bias voltage increases, $K^2_{t,eff}$ and Q increases. Furthermore, as the RF input power is increased beyond 0 dBm, these two quantities begin to notably deviate from their small signal values. From the measurement results it is observed that ferroelectric FBARs at lower bias voltages exhibit more nonlinearity.

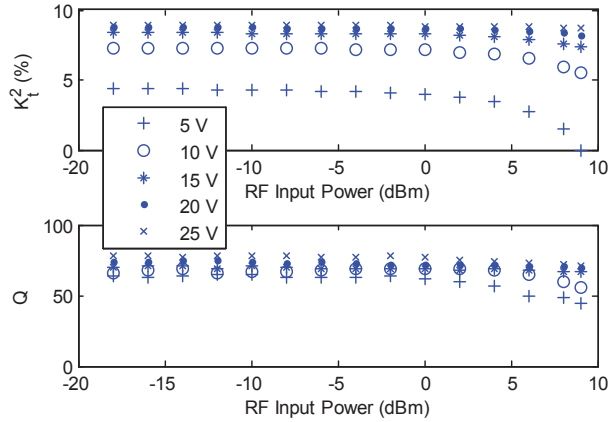

Fig. 3. $K^2_{t,eff}$ and Q of the BST FBAR as a function of RF input power at applied dc bias voltages of 5, 10, 15, 20 and 25 V.

IV. Ferroelectric Nonlinearity Modeling

A nonlinear modified Butterworth-Van Dyke (MBVD) model, shown in Fig. 4, has been developed to represent the behavior observed in the large signal measurement results of BST FBARs. The nonlinear MBVD model consists of the seven lumped elements defined in Fig. 4 where the values of L_m and C_m determine f_s, the values of L_m, C_m, and C_0 determine f_p, and the rest of the elements represent undesired parasitics.

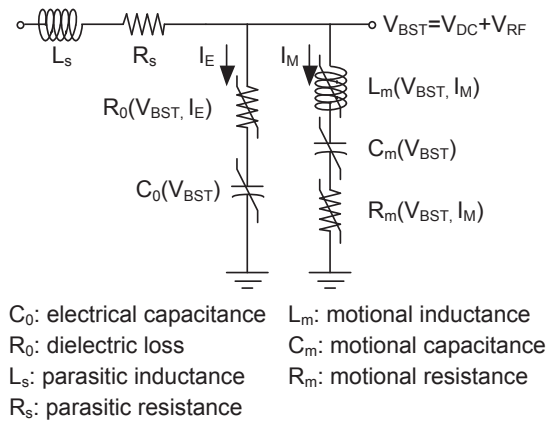

Fig. 4. A Nonlinear MBVD model used to represent the large signal behavior of ferroelectric thin film FBARs.

The procedure for generating the nonlinear MBVD model is as follows. First, the voltage dependent small signal equivalent circuit model parameters are extracted from the measurement results at the various dc bias voltages and fitted to a polynomial such that the value of each element is a function of the voltage across the device (V_{BST}), similar to the procedure in [9]. Subsequently, additional current dependent nonlinear parameters (I_M, I_E) are incorporated into R_0, L_m, and R_m.

Lastly, the nonlinear model is imported into a microwave circuit simulator and analyzed using large signal *S*-parameters at different power levels and compared to measurement results.

Fig. 5 shows the good agreement between the model and the measurement results. As the RF power applied to the device increases, the size of the impedance-circle on the Smith Chart decreases. This behavior reflects the decrease in the effective electromechanical coupling coefficient and/or quality factor of the resonator. This nonlinear model can be used to better understand the effect of high power on ferroelectric based transmit filter and frequency tunable/switchable oscillator designs.

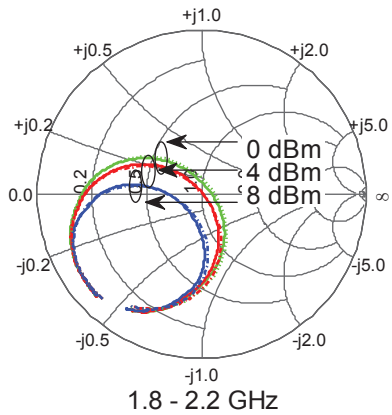

Fig. 5. Comparison between the measurement (solid line) and nonlinear MBVD model (dotted line) results at a bias voltage of 5 V and power levels of 0, 4, and 8 dBm.

VII. Conclusion

The large signal performance of BST thin film FBAR is presented. Measurement results show the quality factor and effective electromechanical coupling decreases as the RF input power increases. A nonlinear MBVD model is presented and compared to measurement results, showing good agreement. Future work includes verifying the major contributions of the nonlinear behavior in ferroelectric FBARs and improving the agreement between the nonlinear MBVD model and measurement results.

Acknowledgement

This work is partially funded by the National Science Foundation and ARL MAST program. It is performed at the Lurie Nanofabrication Facility, a member of the National Nanotechnology Infrastructure Network, which is supported in part by the National Science Foundation.

References

[1] Jia-Shiang Fu; Zhu, X.A.; Phillips, J.D.; Mortazawi, A.; , "A ferroelectric-based impedance tuner for adaptive matching applications," *Microwave Symposium Digest, 2008 IEEE MTT-S International* , vol., no., pp.955-958, 15-20 June 2008.

[2] R. York, "Tunable Dielectrics for RF Circuits," in *Multifunctional Adaptive Microwave Circuits and Systems*. 1st ed., M. Steer, and W. D. Palmer, Ed. Raleigh, NC: Sci Tech Publishing, 2009, pp.159-207.

[3] Lourandakis, E.; Schmidt, M.; Seitz, S.; Weigel, R.; , "Reduced Size Frequency Agile Microwave Circuits Using Ferroelectric Thin-Film Varactors," *Microwave Theory and Techniques, IEEE Transactions on* , vol.56, no.12, pp.3093-3099, Dec. 2008.

[4] Xinen Zhu; Phillips, J.D.; Mortazawi, A.; , "A DC Voltage Dependant Switchable Thin Film Bulk Wave Acoustic Resonator Using Ferroelectric Thin Film," *Microwave Symposium, 2007. IEEE/MTT-S International* , vol., no., pp.671-674, 3-8 June 2007.

[5] J. Berge, A. Vorobiev, W. Steichen, and S. Gevorgian, "Tunable Solidly Mounted Thin Film Bulk Acoustic Resonators Based on $Ba_xSr_{1-x}TiO_3$ Films," *Microwave and Wireless Components Letters, IEEE*, vol.17, no.9, pp.655-657, Sept. 2007.

[6] G. N. Saddik, D. S. Boesch, S. Stemmer, and R. A. York, "Strontium titanate DC electric field switchable and tunable bulk acoustic wave solidly mounted resonator," *Microwave Symposium Digest, 2008 IEEE MTT-S International*, vol., no., pp.1263-1266, 15-20 June 2008.

[7] Vendik, Irina B.; Turalchuk, Pavel A.; Vendik, Orest G.; Berge, John; , "Modeling tunable bulk acoustic resonators based on induced piezoelectric effect in BaTiO3 and Ba0.25Sr0.75TiO3 films," *Journal of Applied Physics* , vol.103, no.1, pp.014107-014107-6, Jan 2008.

[8] Noeth, Andreas; Yamada, Tomoaki; Tagantsev, Alexander K.; Setter, Nava; , "Electrical tuning of dc bias induced acoustic resonances in paraelectric thin films," *Journal of Applied Physics* , vol.104, no.9, pp.094102-094102-10, Nov 2008.

[9] Norling, M.; Berge, J.; Gevorgian, S.; , "Parameter extraction for tunable TFBARs based on BaxSr1−xTiO3," Microwave Symposium Digest, *2009. MTT '09. IEEE MTT-S International* , vol., no., pp.101-104, 7-12 June 2009.

[10] Kozyrev, A. B.; Samoilova, T. B.; Golovkov, A. A.; Hollmann, E. K.; Kalinikos, D. A.; Loginov, V. E.; Prudan, A. M.; Soldatenkov, O. I.; Galt, D.; Mueller, C. H.; Rivkin, T. V.; Koepf, G. A.; , "Nonlinear behavior of thin film SrTiO3 capacitors at microwave frequencies," *Journal of Applied Physics* , vol.84, no.6, pp.3326-3332, Sep 1998.

[11] Aigner, R.; Ngoc-Hoa Huynh; Handtmann, M.; Marksteiner, S.; , "Behavior of BAW devices at high power levels," *Microwave Symposium Digest, 2005 IEEE MTT-S International* , vol., no., pp. 4 pp., 12-17 June 2005.

[12] Shim, D.S.; Feld, D.A.; , "A general nonlinear Mason model of arbitrary nonlinearities in a piezoelectric film," *Ultrasonics Symposium (IUS), 2010 IEEE* , vol., no., pp.295-300, 11-14 Oct. 2010.

[13] Radiant Technologies, Inc.